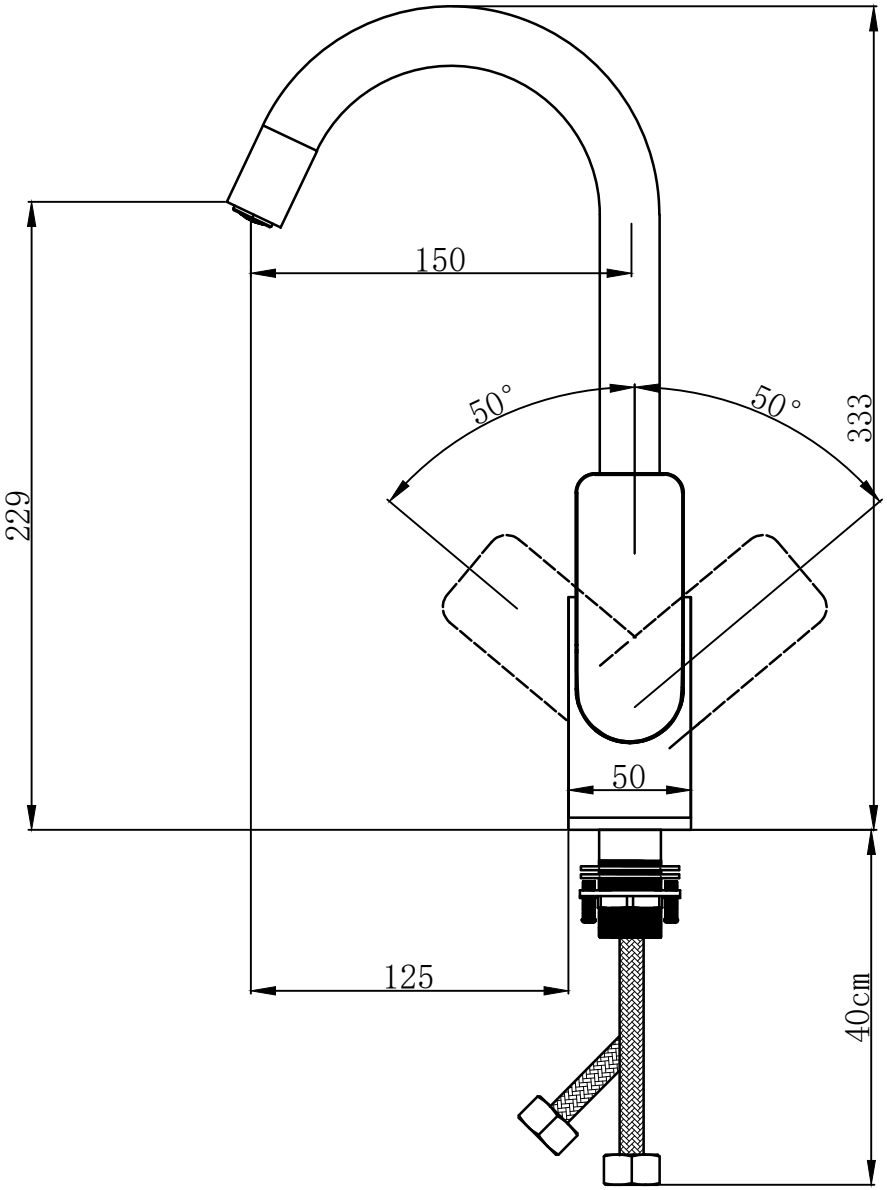
150
50°
50°
333
229
50
125
40cm

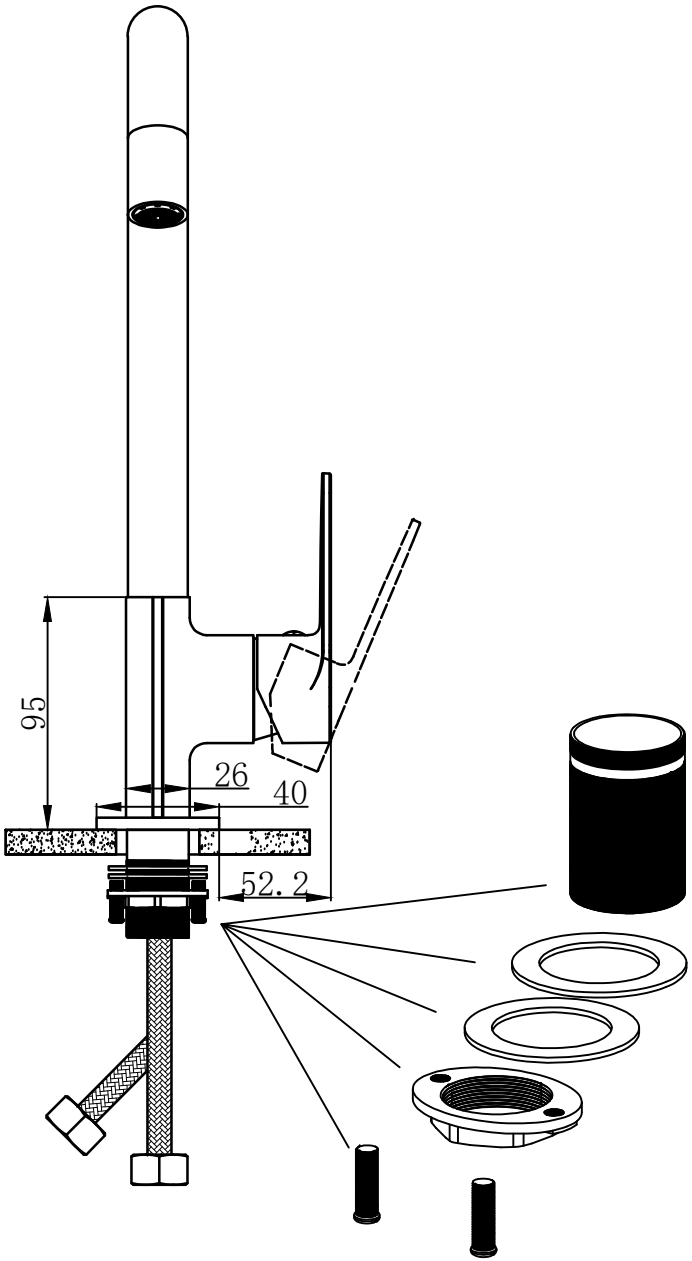
95
26
40
52.2